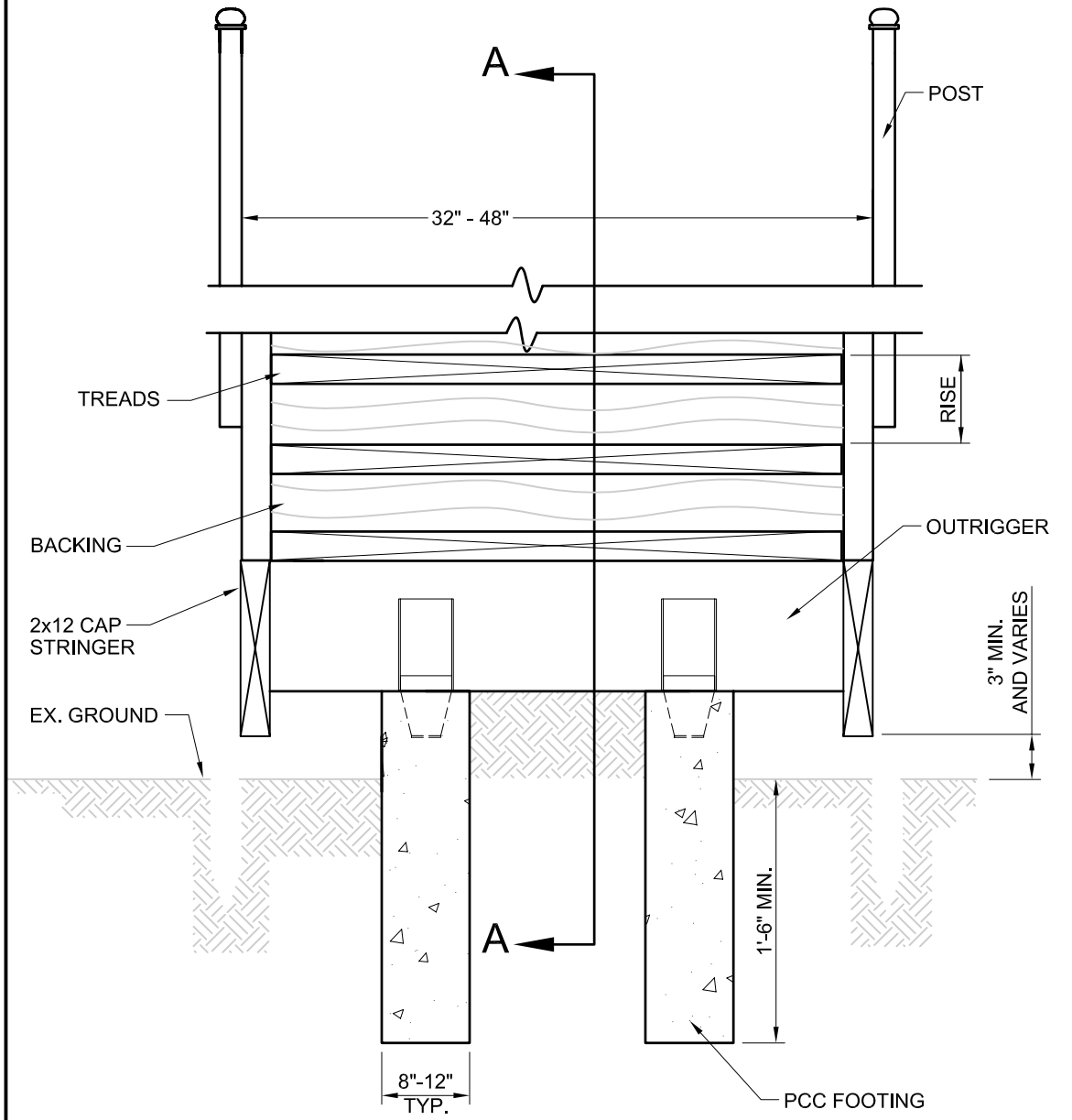

TYPICAL ELEVATED STAIRWAY

SCALE : 1"=1'-0"

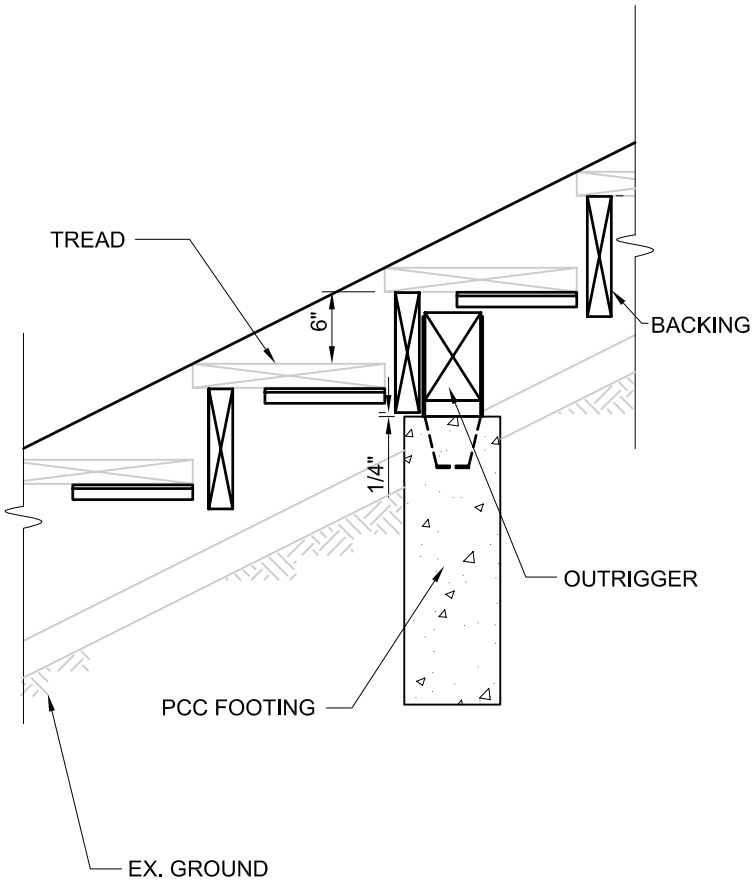

SECTION A-A

SCALE : 1"=1'-0"

PROJECT SITE

CRYSTAL COVE STATE PARK
HISTORIC DISTRICT

SHEET TITLE

FIGURE 2.5
STAIRWAY